WIRING DIAGRAM
CTC CARTESIAN TRIAXIAL SENSORS

4 Pin MIL
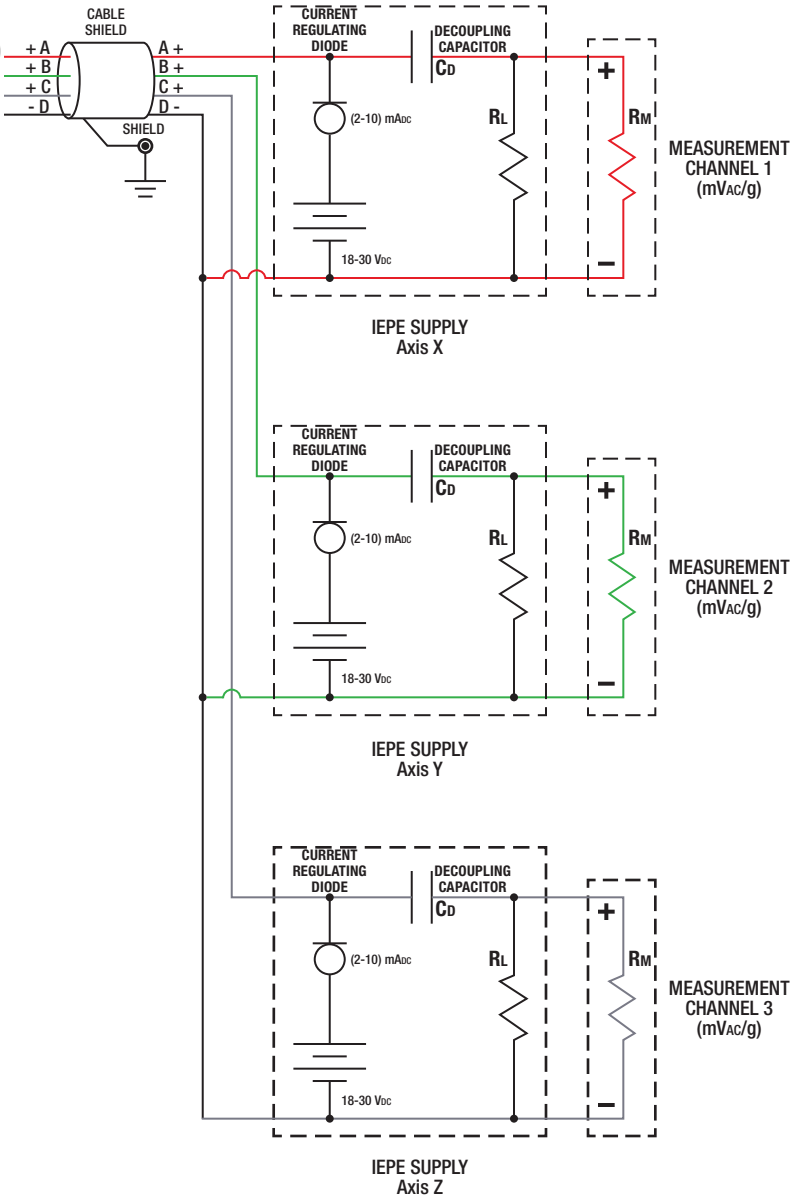
Pin A Axis X
Pin B Axis Y
Pin C Axis Z
Pin D Common